FIXED CENTER – TAPPERED STYLE TIPS
TUBING & PRESSURE

~FOR QUOTATION ONLY~
THIS STYLE OF TIP REQUIRES
(2) SAMPLES TO BE INSPECTED
BY GUILL TOOL

NOTE TO CUSTOMER:
*PLEASE FILL OUT ALL VARIABLE DIMENSIONS AND MATERIAL SPECIFICATIONS PRIOR TO ORDERING
*INTERNAL CONFIGURATION FOR WIRE "LEAD IN") CAN VARY (TAPER DRILL, STRAIGHT DRILL, OR STRAIGHT TAPER)
*FOR SPECIAL NOSE CONFIGURATIONS PLEASE FILL OUT SHEET# SB-T004

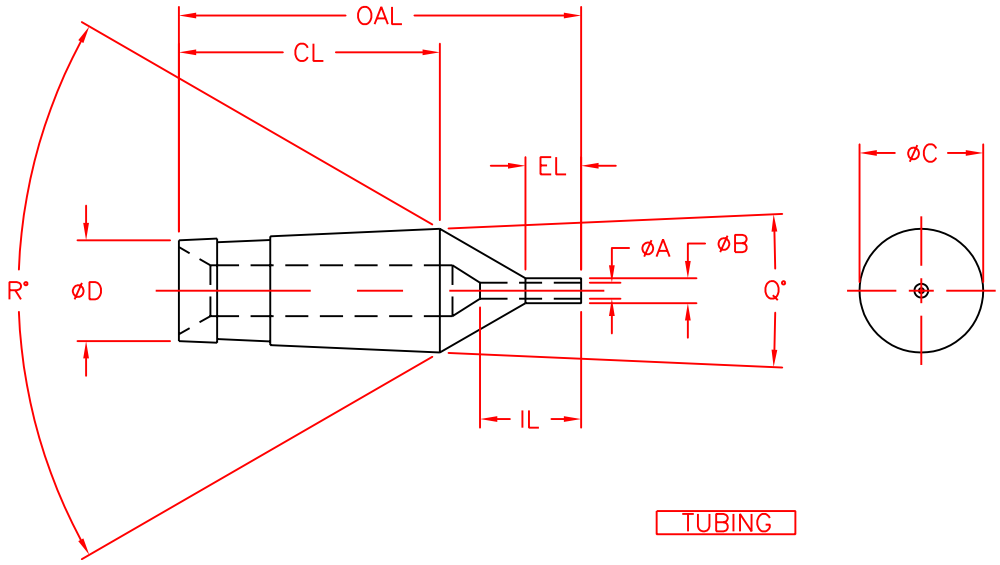

TUBING

PRESSURE

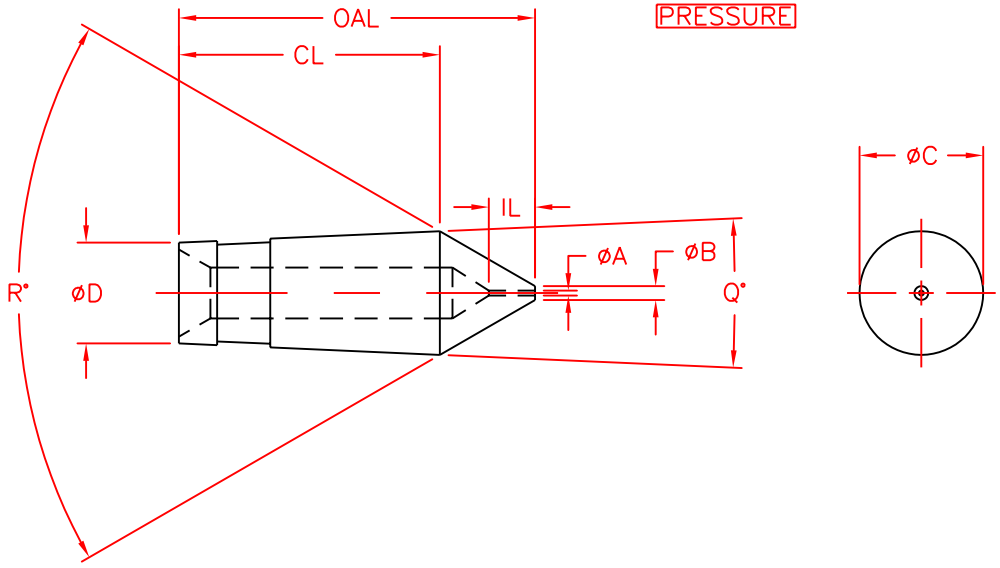

[KEY]
øA= FEED DIAMETER
øB= NOSE DIAMETER
OAL= OVERALL LENGTH
øC= BODY DIAMETER
øD= MINOR DIAMETER
CL= BODY LENGTH
EL= EXTERNAL LAND
IL= INTERNAL LAND
Q°= BODY ANGLE
R°= NOSE ANGLE

MATERIALS
420 SS
D2
CRS/C1
HASTELLOY
INCONEL
OTHER

QTY	øA	øB	OAL	øC	øD	CL	EL	IL	Q°	R°

GUILL TOOL & ENGINEERING CO.
10 PIKE ST.,WEST WARWICK, RI
401-828-7600 FAX 401-823-5310

DRAWING TITLE: TAPPERED STYLE TIPS			
CROSS REFERENCE: SALESBOOK\TIPS\			
TOLERANCES UNLESS SPECIFIED .X=±.1 .XX=±.01 .XXX=±.005	DR. BY: ARR	MATERIAL: VARIES	
DATE: 10/3/01	SCALE: FULL	APPROVE:	DRAWING NO. SB-T003